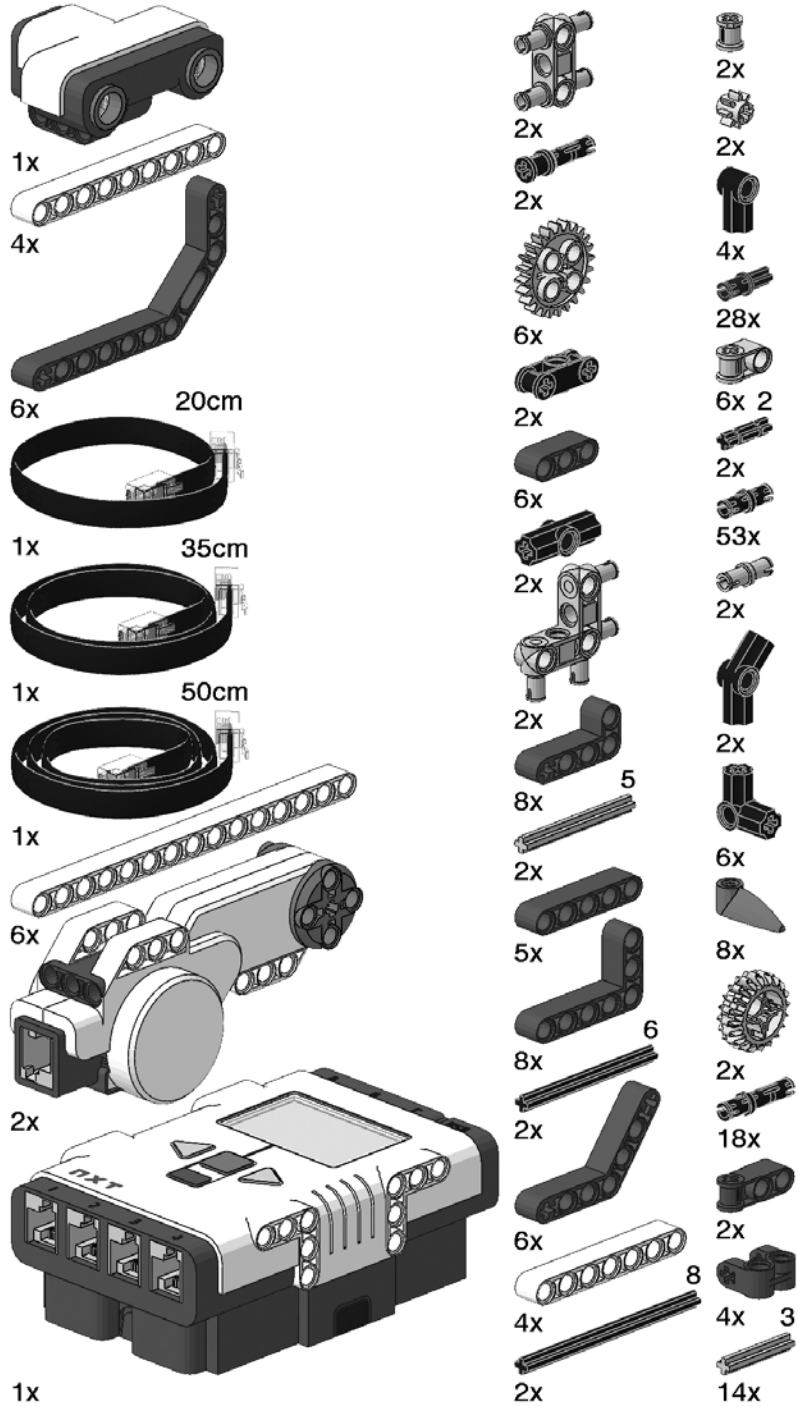

Figure 5-6. *Omni-Biped bill of materials*

Table 5-1. *Omni-Biped Bill of Materials*

Quantity	Color	Part Number	Part Name
1		56467.DAT	Electric MINDSTORMS NXT Ultrasonic Sensor
4	White	40490.DAT	TECHNIC Beam 9
6	Dark gray	32009.DAT	TECHNIC Beam 11.5 Liftarm Bent 45 Double
1	Black	55804.DAT	Electric Cable NXT 20cm
1	Black	55805.DAT	Electric Cable NXT 35cm
1	Black	55806.DAT	Electric Cable NXT 50cm
6	White	32278.DAT	TECHNIC Beam 15
2		53787.DAT	Electric MINDSTORMS NXT Motor
1		53788.DAT	Electric MINDSTORMS NXT
2	Light gray	48989.DAT	TECHNIC Axle Joiner Perpendicular 1×3×3 with 4 Pins
2	Black	32054.DAT	TECHNIC Pin Long with Stop Bush
6	Light gray	3648.DAT	TECHNIC Gear 24 Tooth
2	Black	32184.DAT	TECHNIC Axle Joiner Perpendicular 3L
6	Dark gray	32523.DAT	TECHNIC Beam 3
2	Black	32034.DAT	TECHNIC Angle Connector #2
2	Light gray	55615.DAT	TECHNIC Beam 5 Bent 90 (3:3) with 4 Pins
8	Dark gray	32140.DAT	TECHNIC Beam 5 Liftarm Bent 90 (4:2)
2	Light gray	32073.DAT	TECHNIC Axle 5
5	Dark gray	32316.DAT	TECHNIC Beam 5
8	Dark gray	32526.DAT	TECHNIC Beam 7 Bent 90 (5:3)
2	Black	3706.DAT	TECHNIC Axle 6
6	Dark gray	32348.DAT	TECHNIC Beam 7 Liftarm Bent 53.5 (4:4)
4	White	32524.DAT	TECHNIC Beam 7
2	Black	3707.DAT	TECHNIC Axle 8
2	Light gray	3713.DAT	TECHNIC Bush
2	Light gray	3647.DAT	TECHNIC Gear 8 Tooth
4	Black	32013.DAT	TECHNIC Angle Connector #1
28	Blue	43093.DAT	TECHNIC Axle Pin with Friction
6	Light gray	6536.DAT	TECHNIC Axle Joiner Perpendicular
2	Black	32062.DAT	TECHNIC Axle 2 Notched
53	Black	2780.DAT	TECHNIC Pin with Friction and Slots
2	Light gray	3673.DAT	TECHNIC Pin
2	Black	32192.DAT	TECHNIC Angle Connector #4 (135 degree)
6	Black	32014.DAT	TECHNIC Angle Connector #6 (90 degree)

Continued

Table 5-1. *Continued*

Quantity	Color	Part Number	Part Name
8	Orange	41669.DAT	TECHNIC Bionicle 1 × 3 Tooth with Axlehole
2	Light gray	32269.DAT	TECHNIC Gear 20 Tooth Double Bevel
18	Black	6558.DAT	TECHNIC Pin Long with Friction and Slot
2	Dark gray	42003.DAT	TECHNIC Axle Joiner Perpendicular with 2 Holes
4	Dark gray	41678.DAT	TECHNIC Axle Joiner Perpendicular Double Split
14	Light gray	4519.DAT	TECHNIC Axle 3
237 parts total (all included in the NXT retail set)			

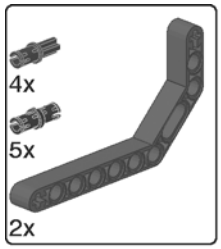

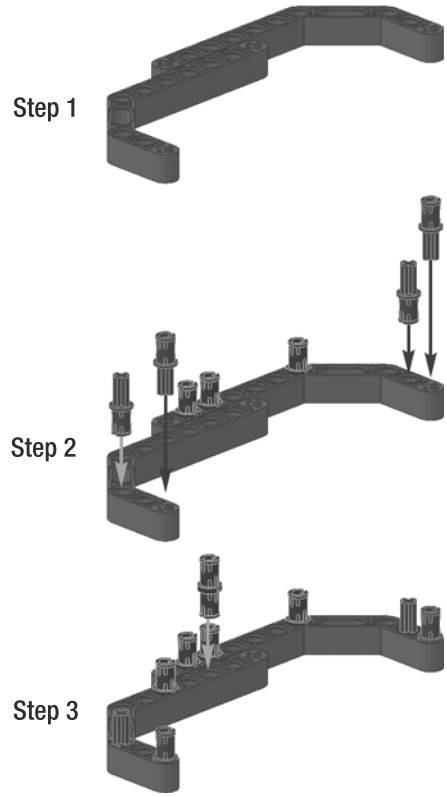

Start building the right foot. In Step 2, insert the blue axle pins at the end of the bent beams.

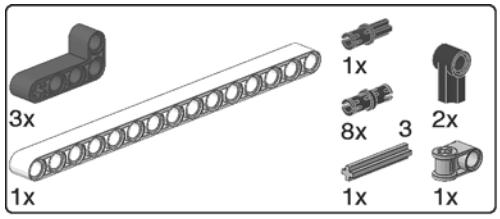

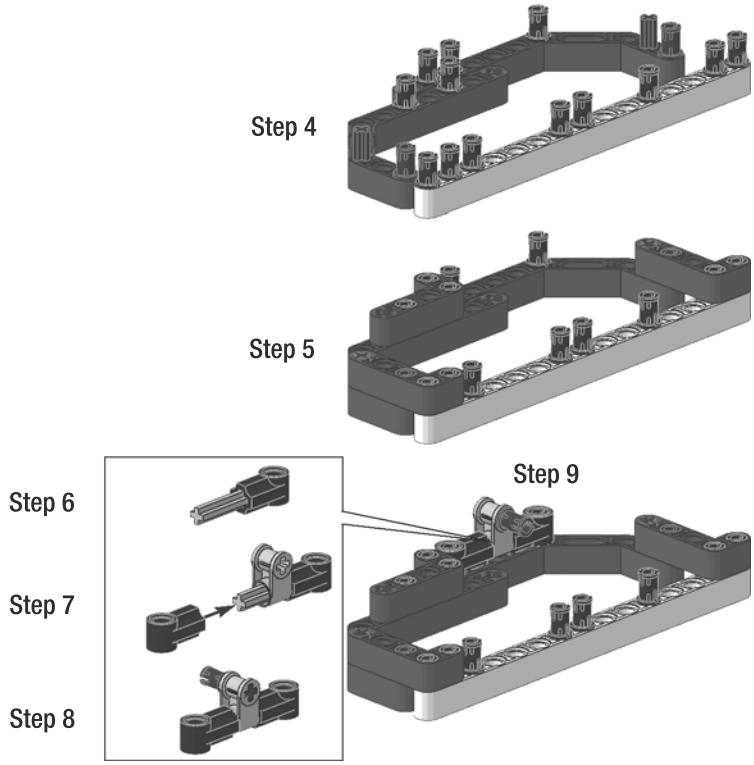

Add a 15-long beam with 8 black pins, then join the foot parts with the dark gray bent liftarms. Finally, add the ankle hinge.

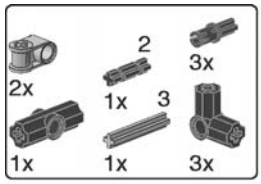

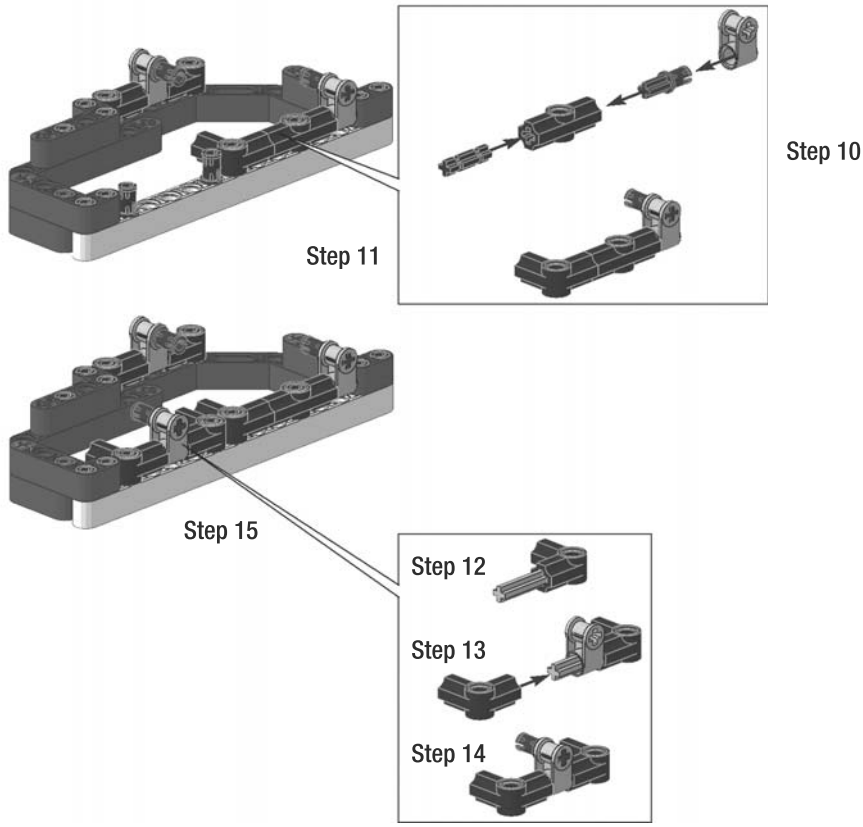

Add the other two ankle hinges that allow the biped to bend the ankle to shift the weight smoothly. The right foot is completed.

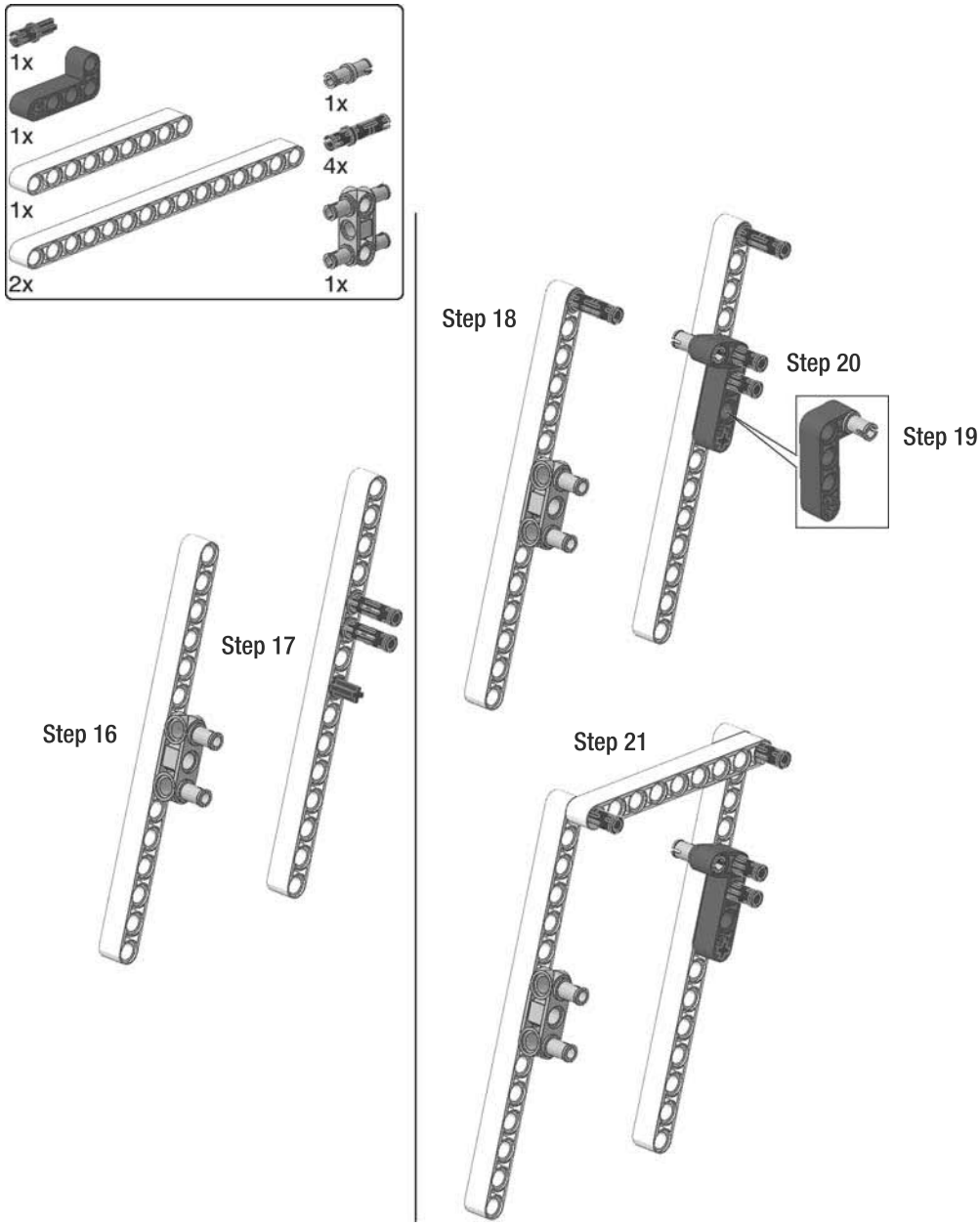

Now build the right leg. Here you must use two 15-long beams and a 9-long beam to join them.

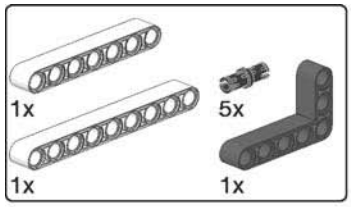

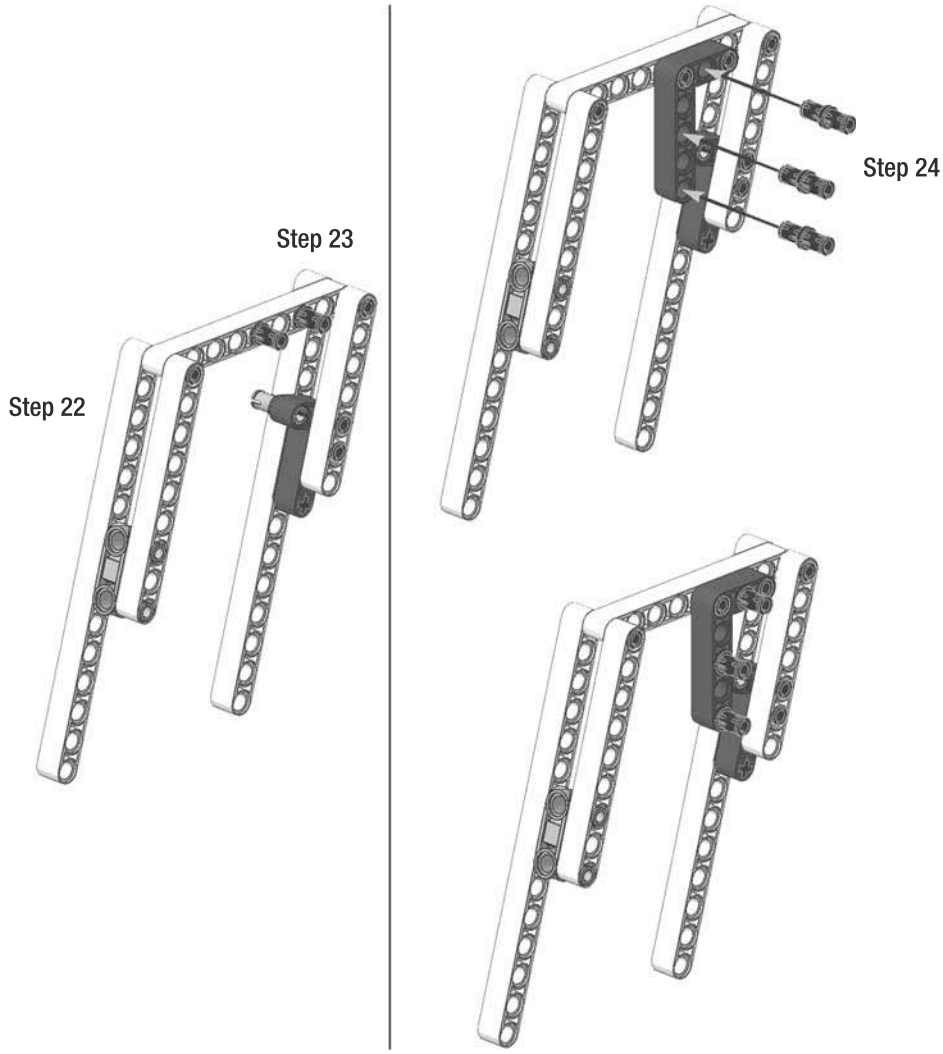

Reinforce the leg using 9-long and 7-long beams. Add the bent beam where the legs' cams will be attached and add the black pins.

Step 25

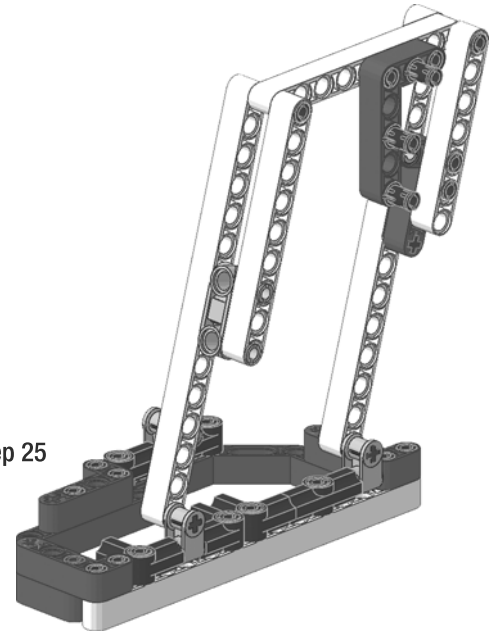

The right leg is done.

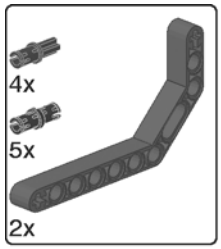

Step 26

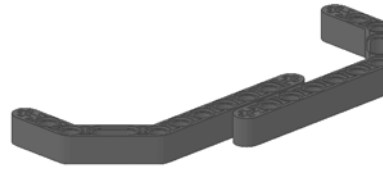

Step 27

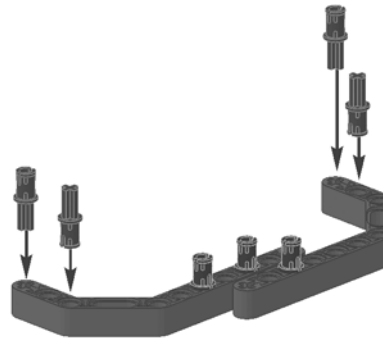

Step 28

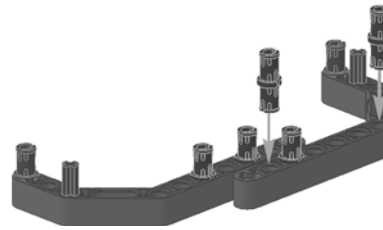

Start building the left foot. In Step 27, insert the blue axle pins at the end of the bent beams.

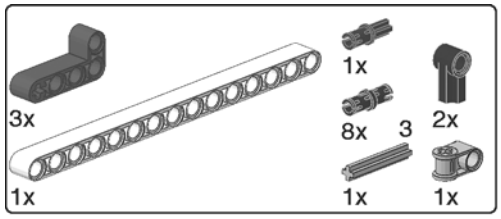

Step 29

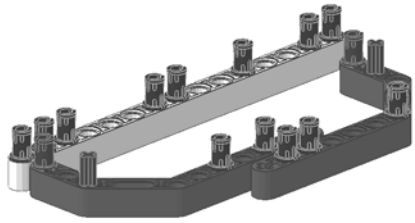

Step 30

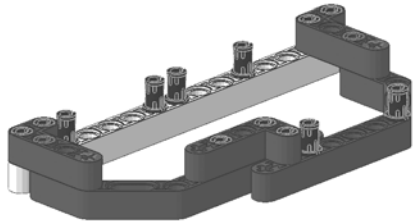

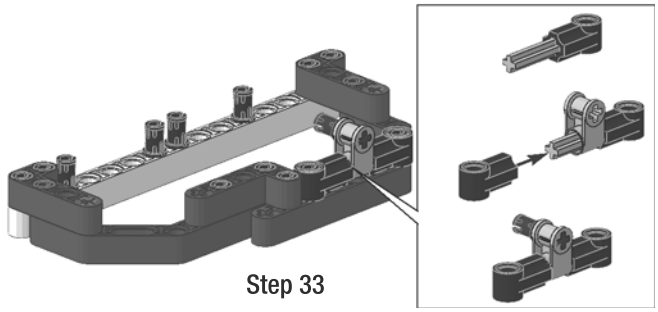

Add a 15-long beam with eight black pins, then join the foot parts with the dark gray bent liftarms. Finally, add the ankle hinge.

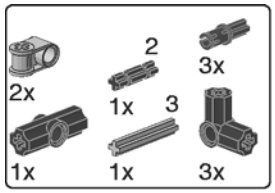

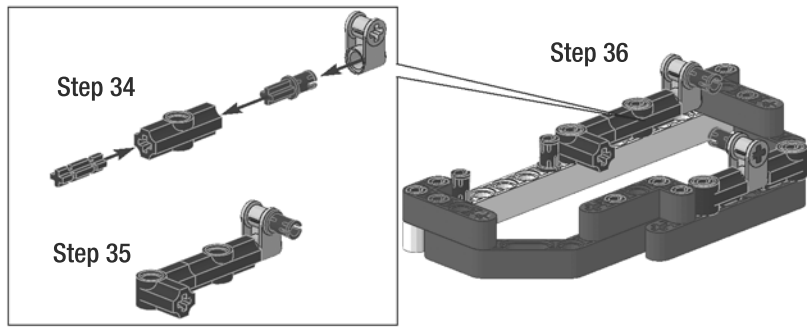

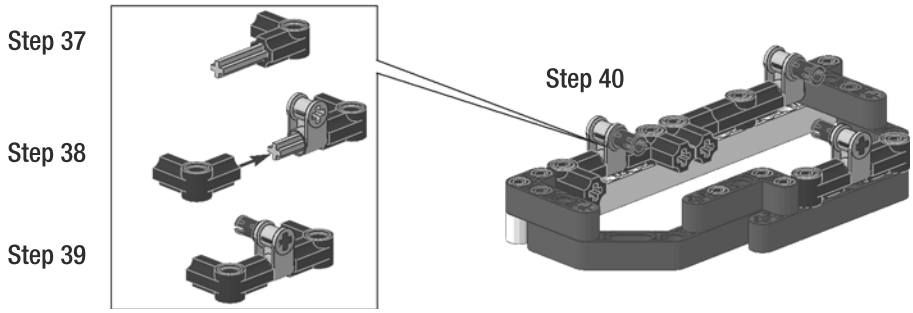

Add the other two ankle hinges. The left foot is completed.

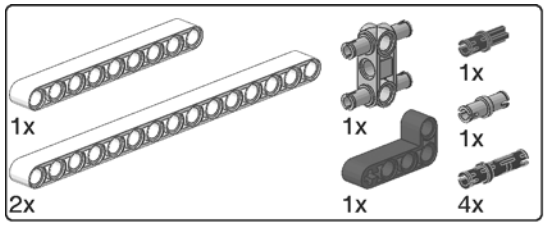

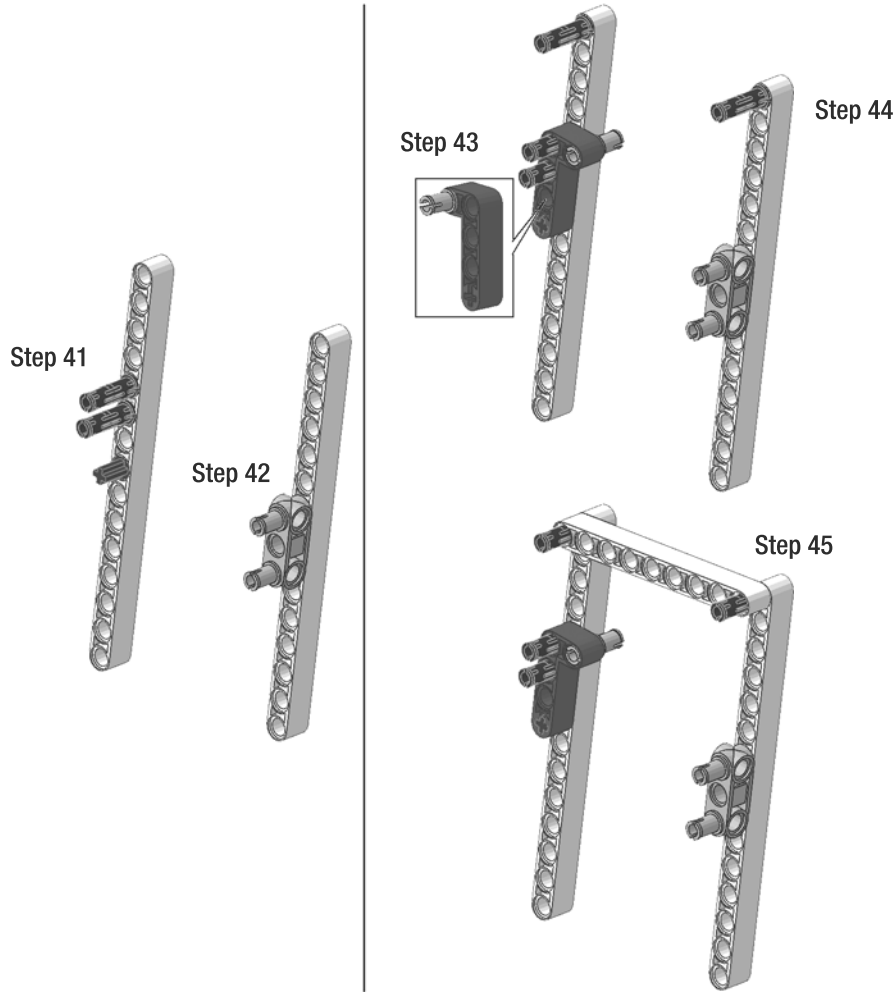

Now build the left leg. Here you must use two 15-long beams and a 9-long beam to join them.

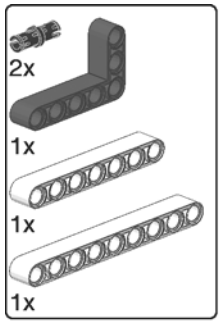

Step 46

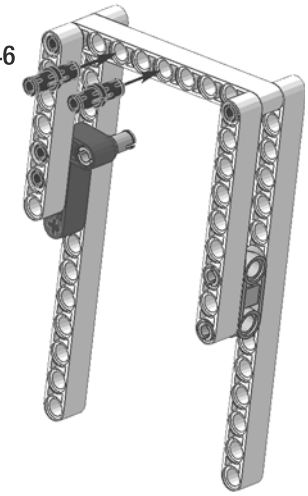

Step 47

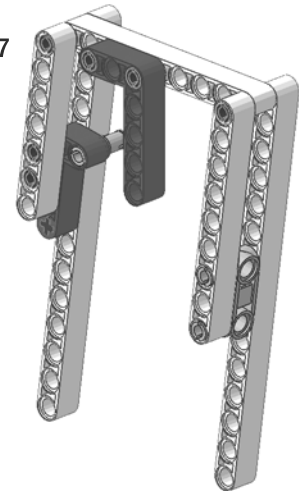

Reinforce the leg using 9-long and 7-long beams. Add the bent beam where the legs' cams will be attached, and the left leg is finished.

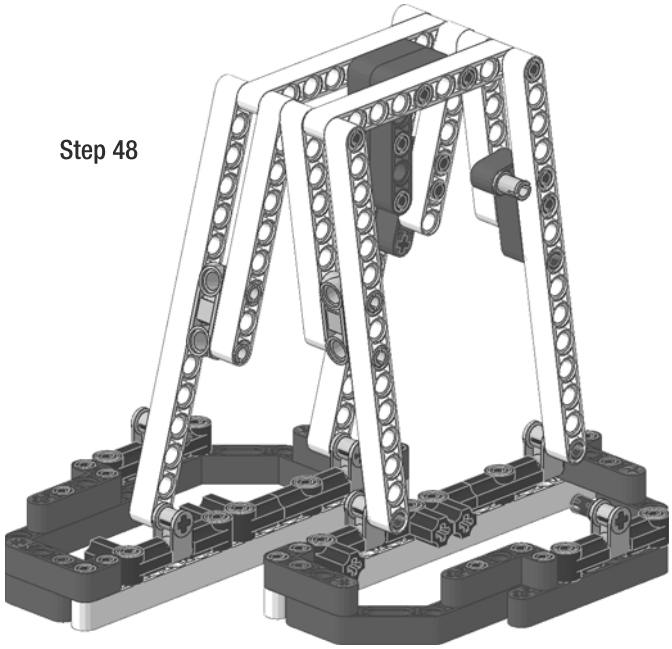

Attach the two legs together, using the central dark gray bent beams as a reference. Place the right leg forward and the left leg backward, as shown.

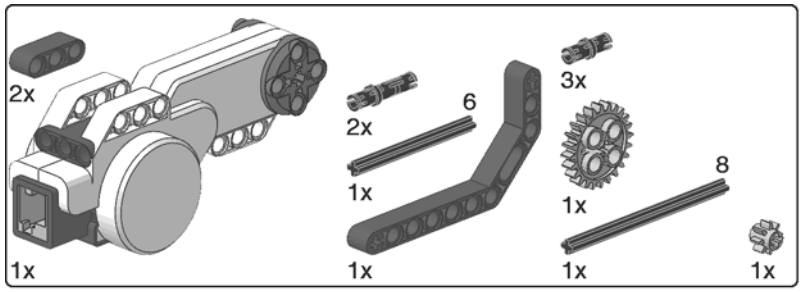

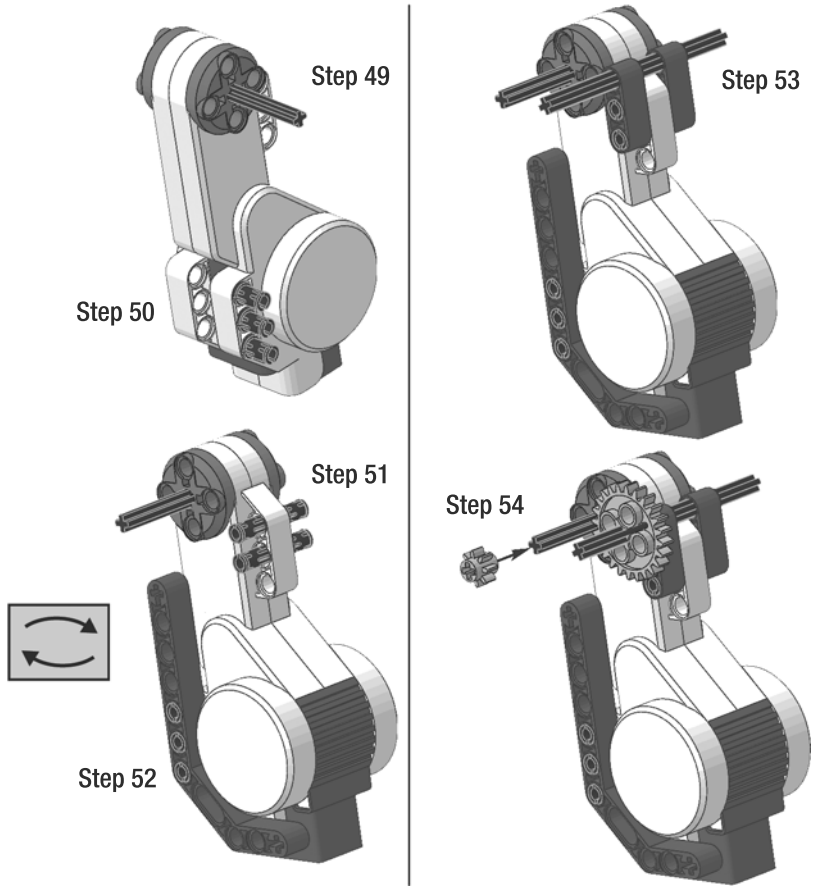

Now you're building the left motor subassembly.

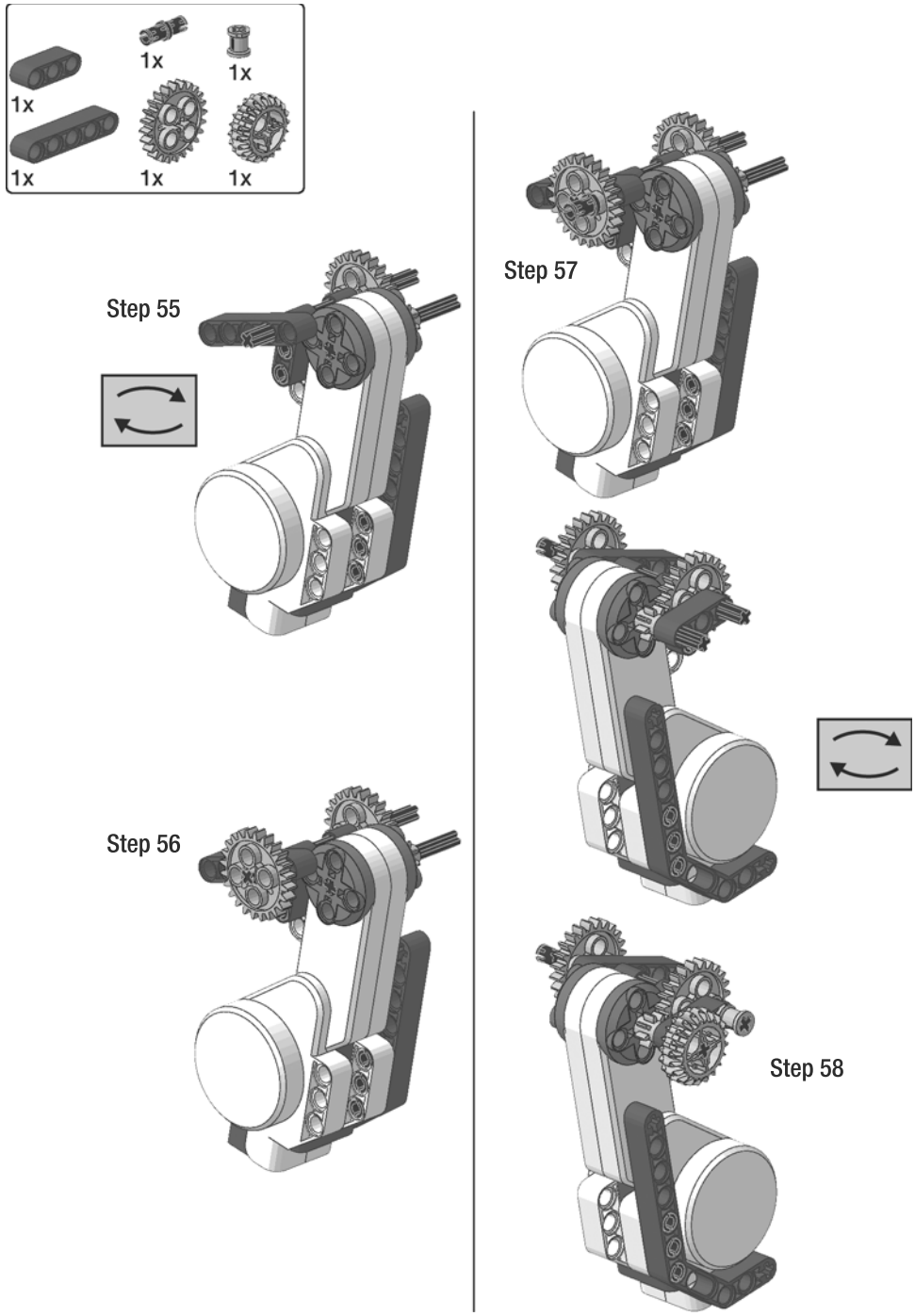

Attach a black pin in a hole of the 24-tooth gear; this gear must be rotated so that two of its holes are aligned with the 5-long beam holes. Use Figure 5-2 as reference.

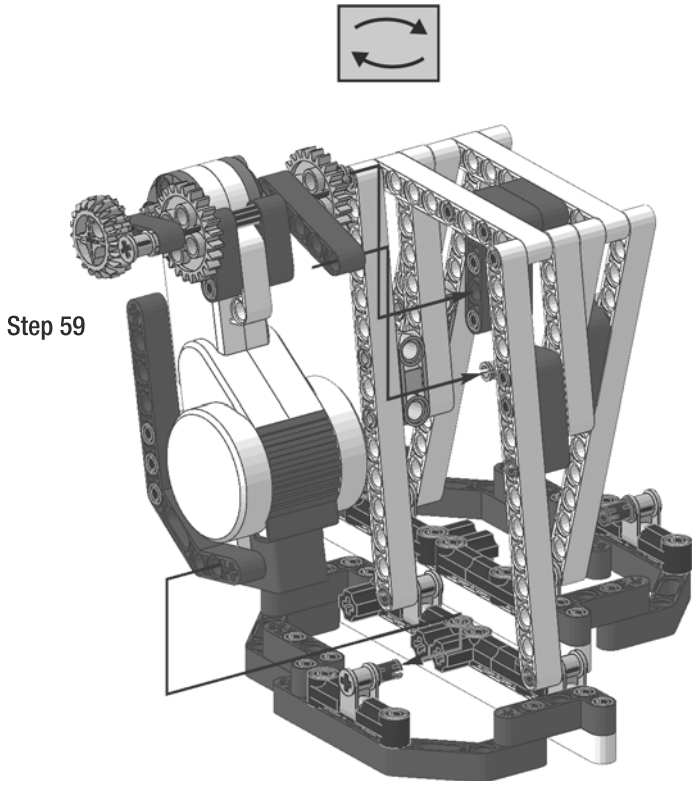

Insert the left motor subassembly in place. The cam pin goes in the free hole of the central bent beams of the leg assembly, the last hole of the 5-long beam goes in the gray pin of the leg, and the external ankle hinge pin goes in the first round hole of the motor assembly's bent beam.

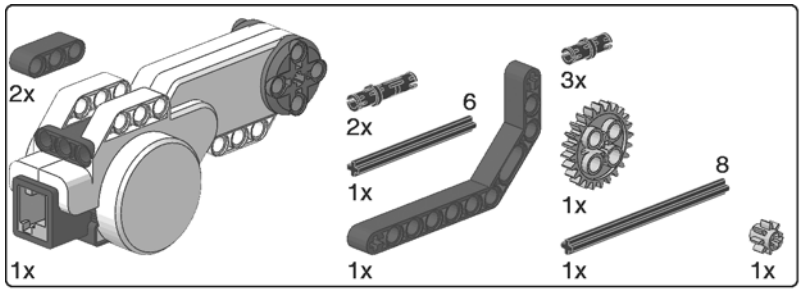

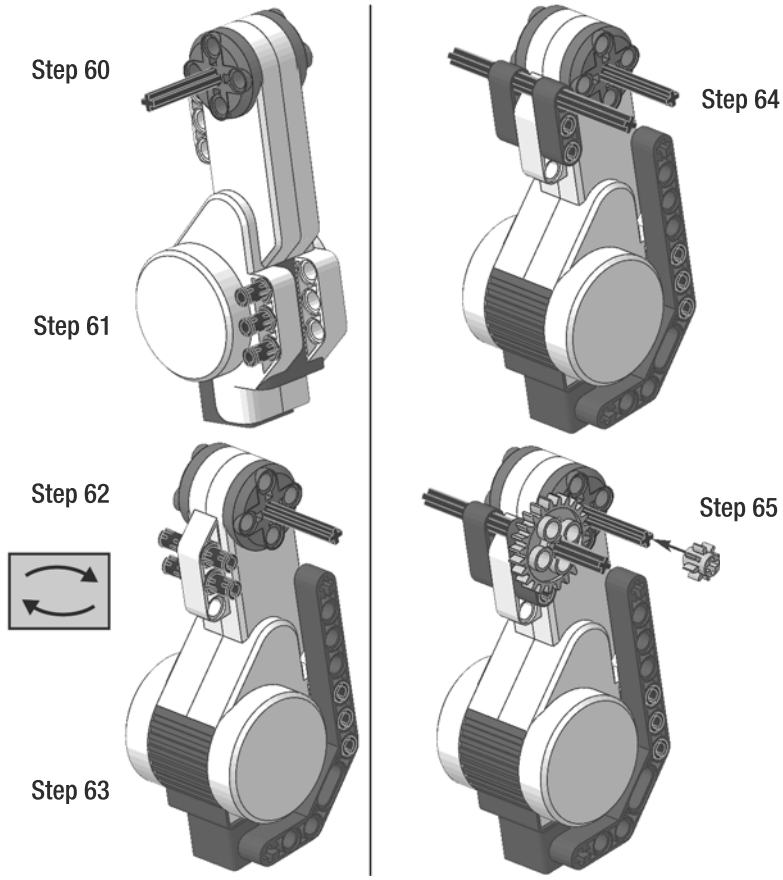

Now you're building the right motor subassembly.

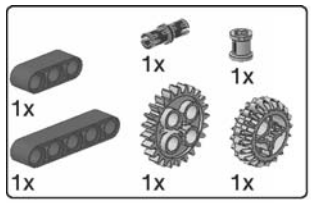

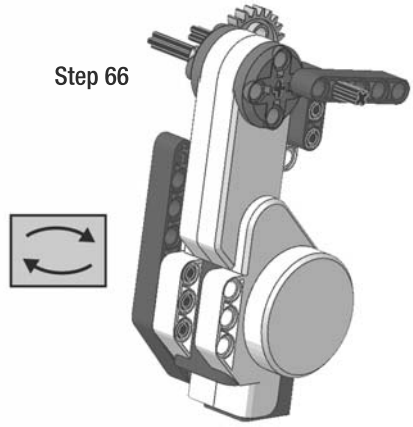

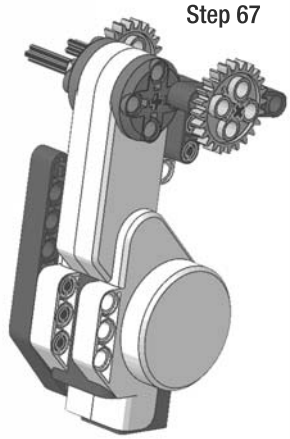

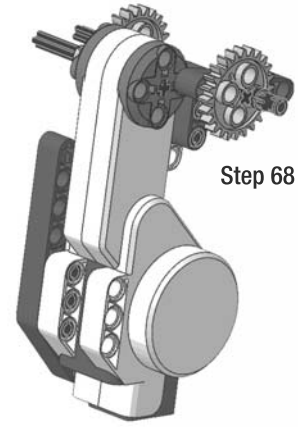

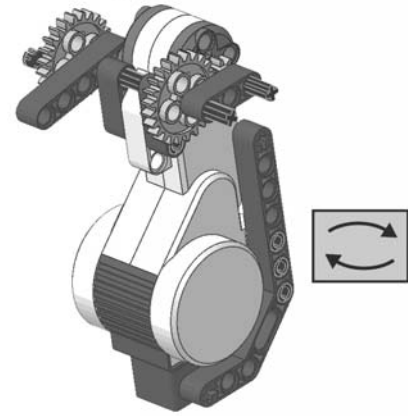

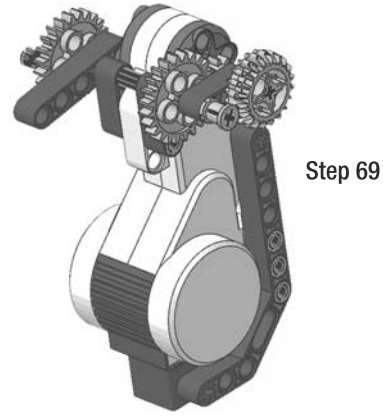

Attach the black pin in a hole of the 24-tooth gear, so that it is the opposite hole with respect to where you placed the pin in the other leg cam. This is not crucial now, but the correct alignment of cams and legs is essential later.

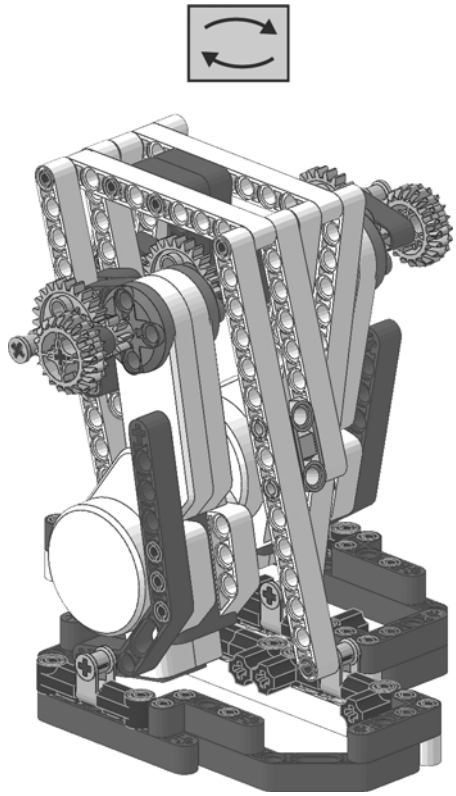

Step 70

Insert the right motor assembly onto the robot structure as before. The walking base is completed.

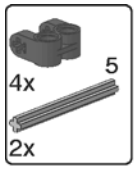

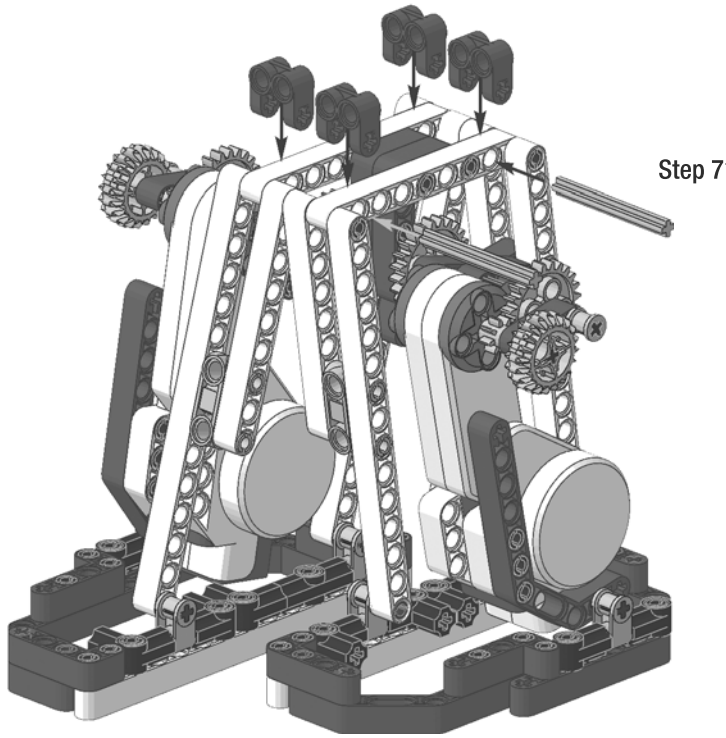

From now on, you are building the robot's upper body. You can get creative or continue building as illustrated. Rotate the model and add the perpendicular joiners, blocking them with two 5-long axles.

Step 72

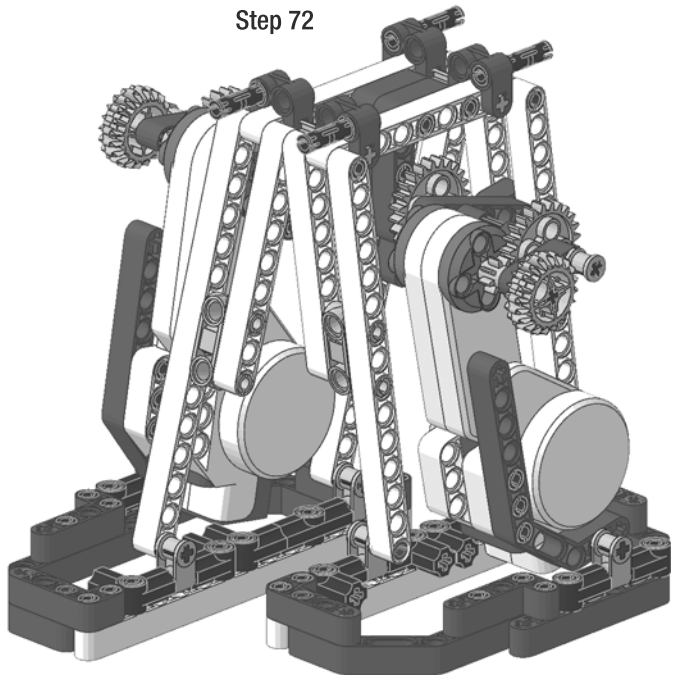

Add four black long pins.

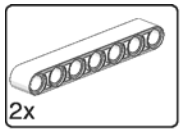

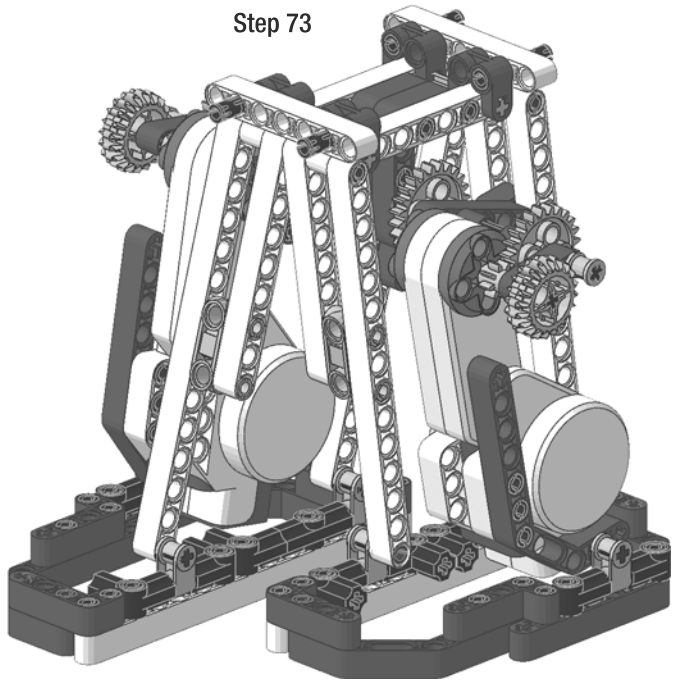

Add the 7-long beams.

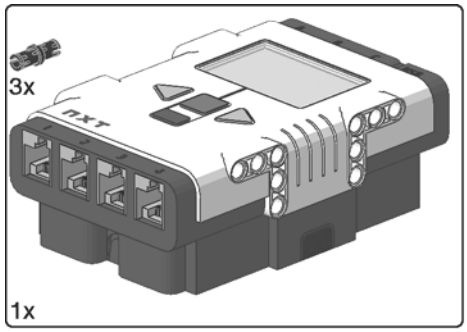

Step 74

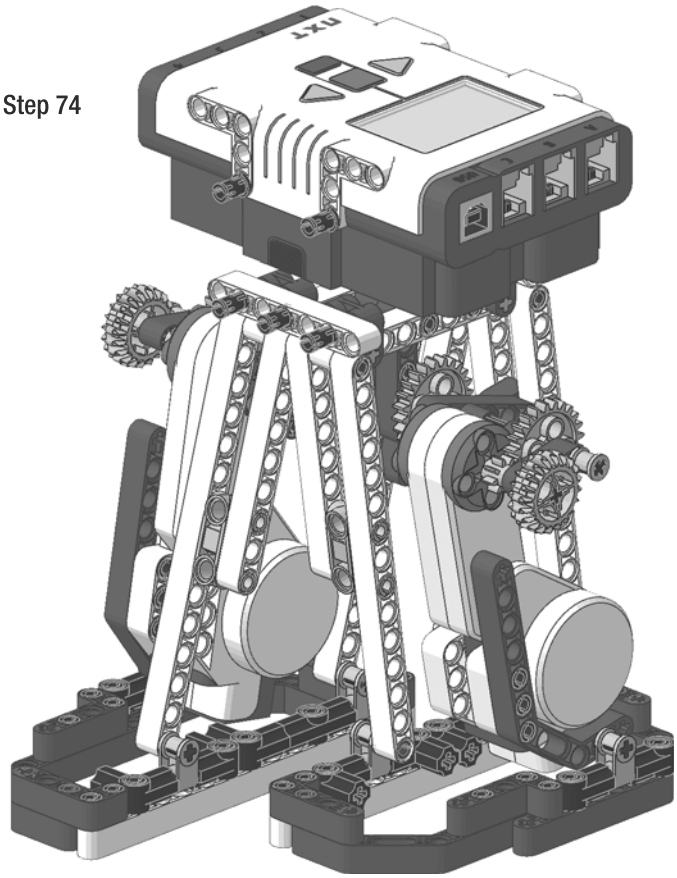

Place the NXT on the legs and put three pins where shown. In the picture you see a "flying" NXT because the instructions are meant for both those who will use normal batteries or the Li-Ion battery pack, which makes the NXT one unit taller than normal.

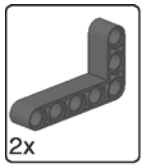

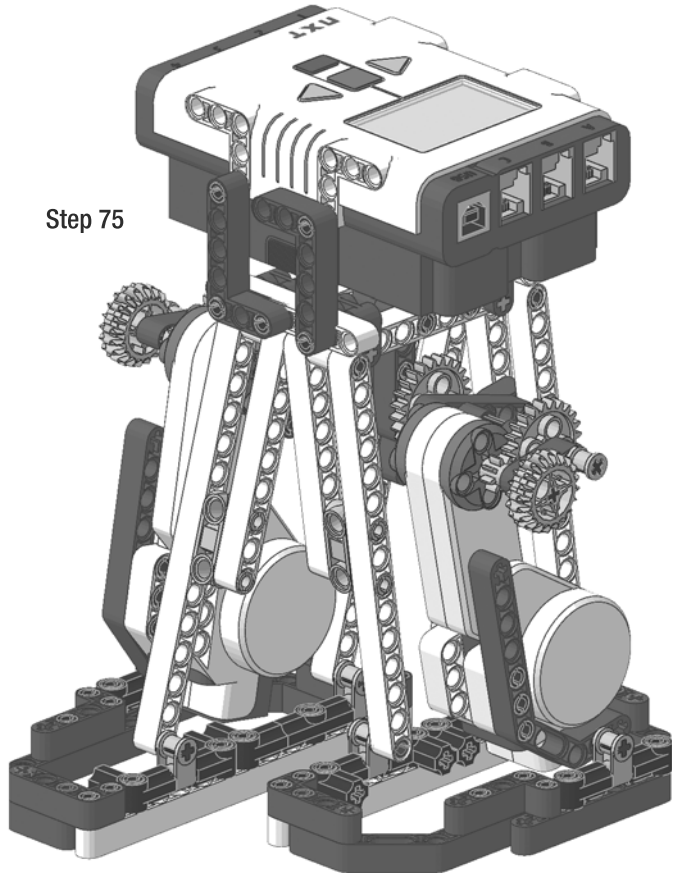

Place two bent beams to lock the NXT on this side.

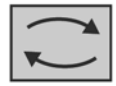

Step 76

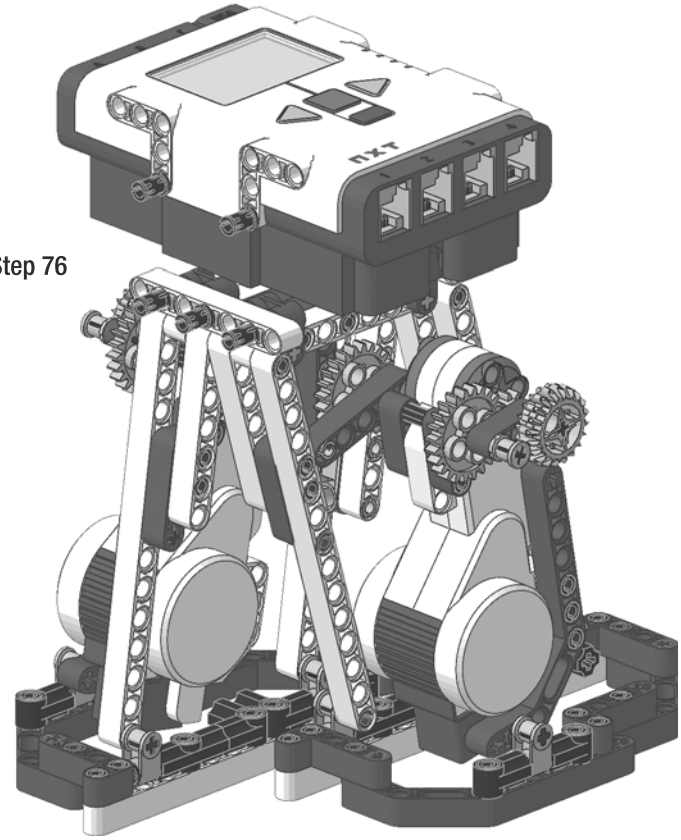

Turn the model to see the robot's back. Add three pins as before.

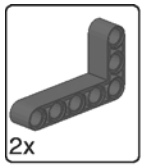

Step 77

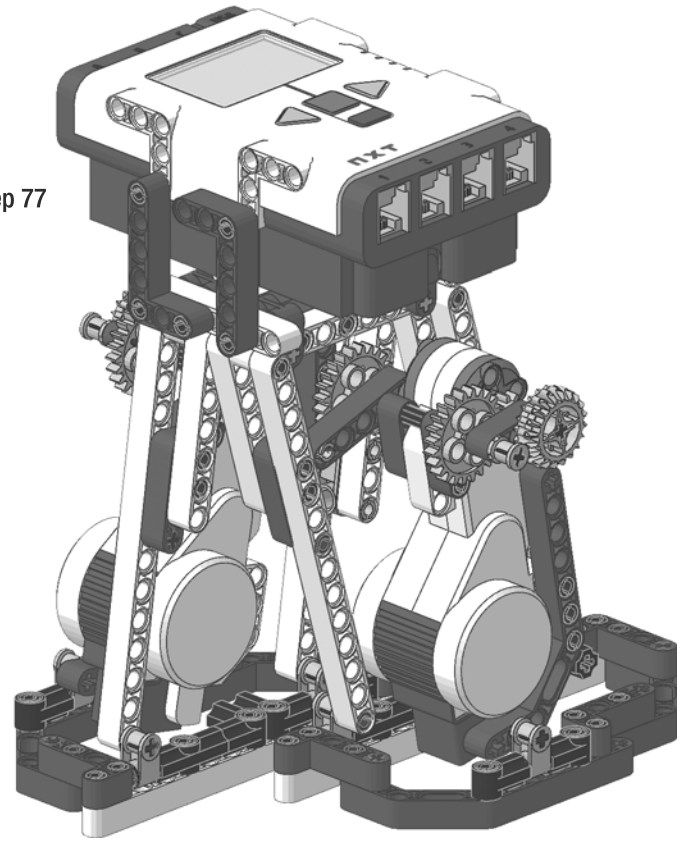

Add two bent beams again and the NXT is now completely locked onto the legs.

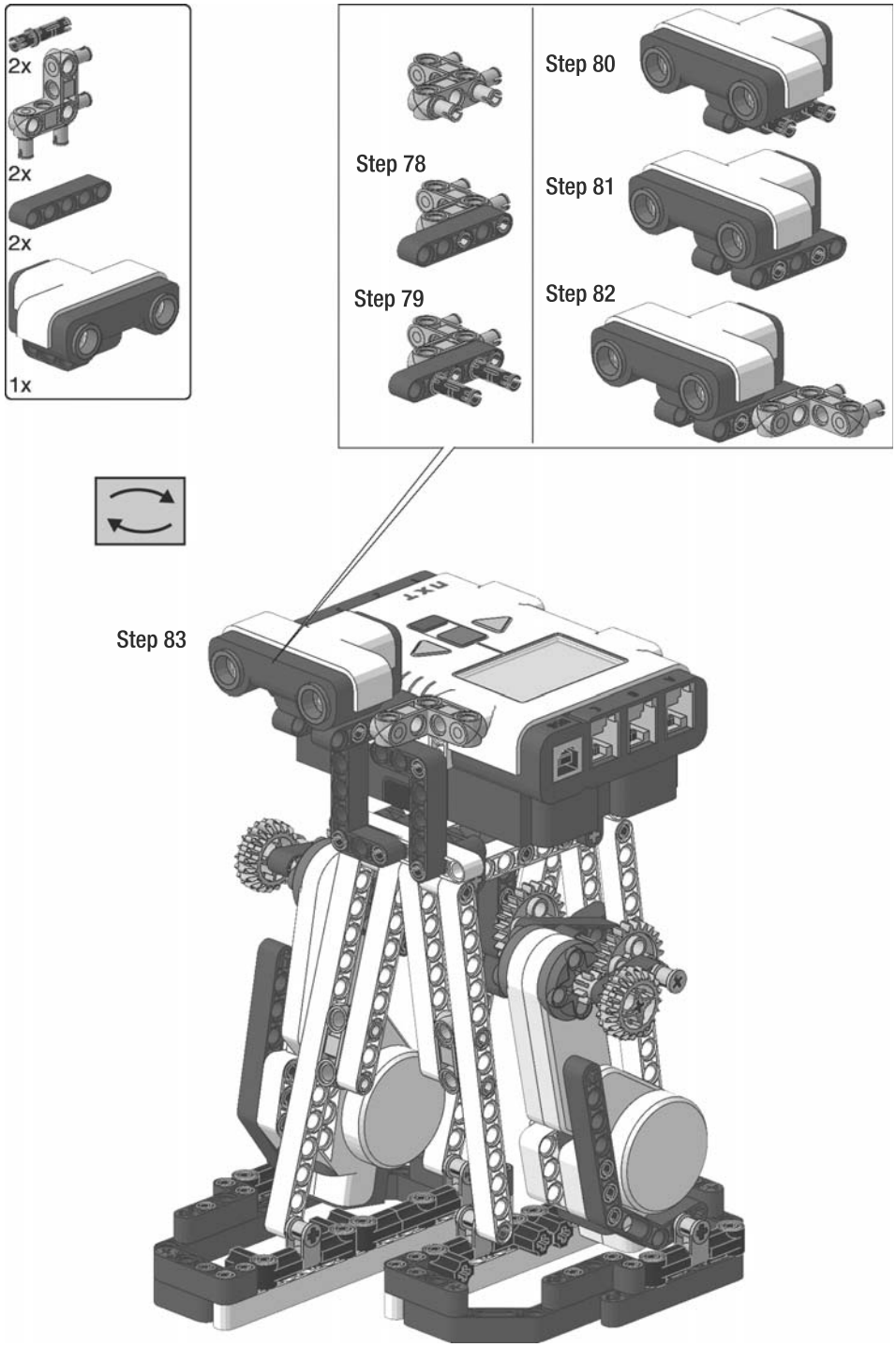

Build the robot's head.

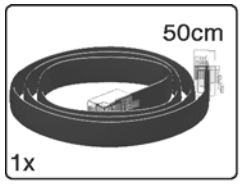

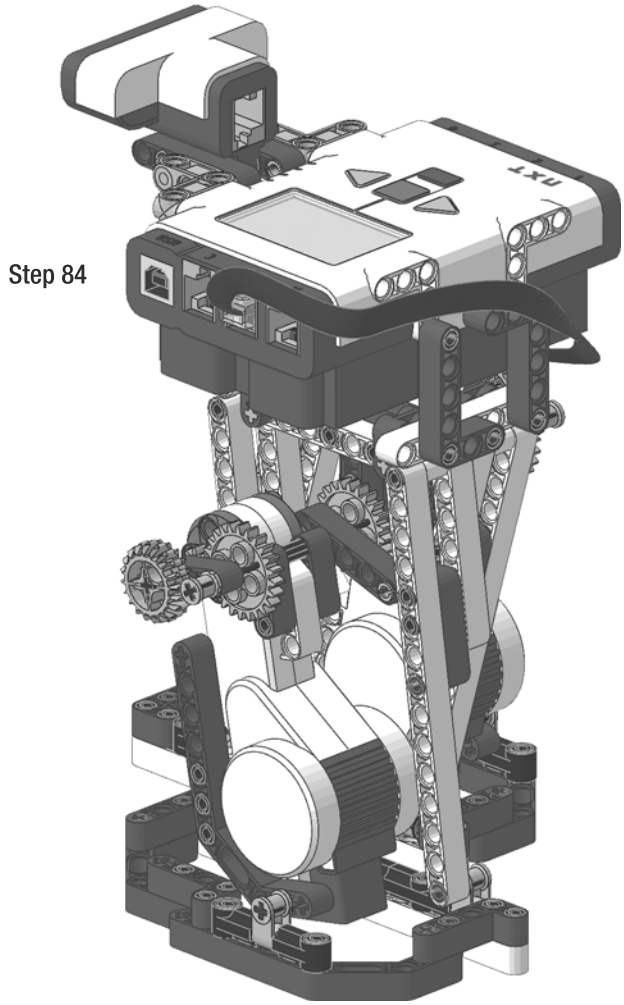

Attach the right motor to NXT output port B using a 50cm (20 inch) cable. See the next step (85) to see where to pass the cable.

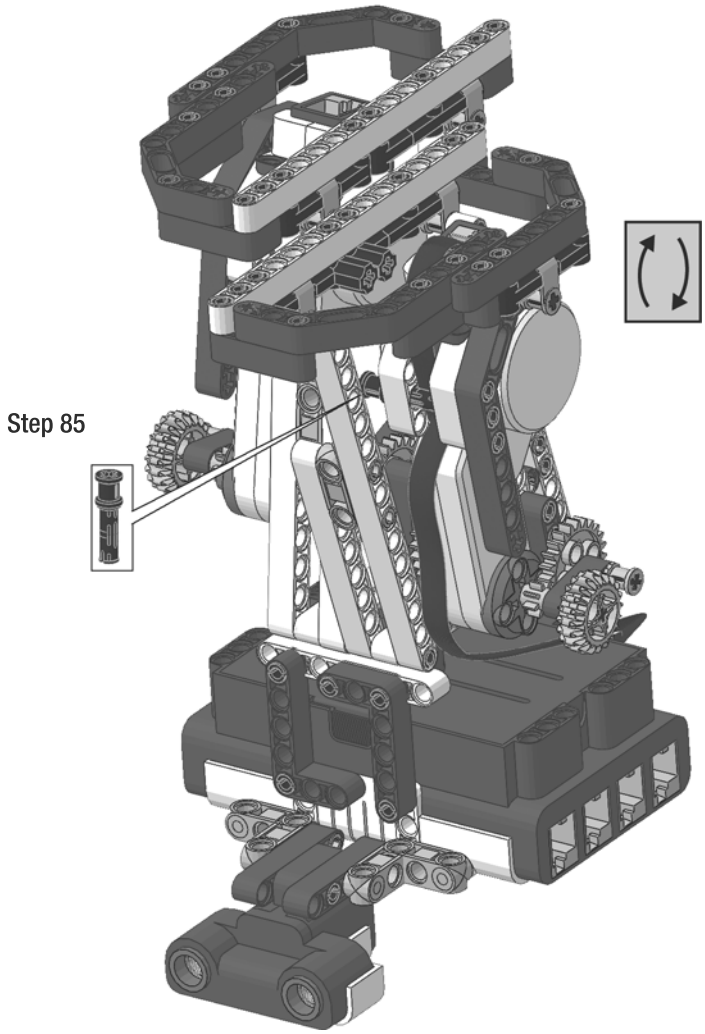

The cable must pass tightly in the space between the motor's white beams, and you must block it there with a long pin with the stop bush. The cable turn in the bottom of the foot must clear the ground or the robot won't walk correctly.

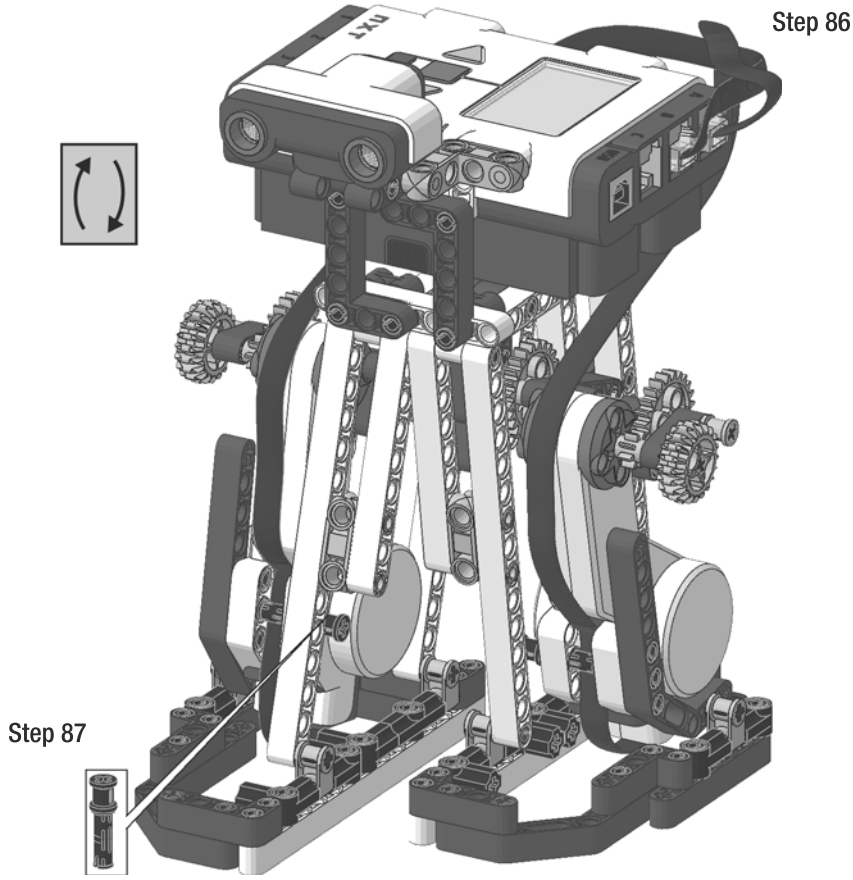

Attach the left motor to NXT output port A using a 35cm (14 inch) cable. Pass and block the cable as shown. Check the previous caption as a guide.

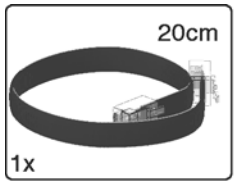

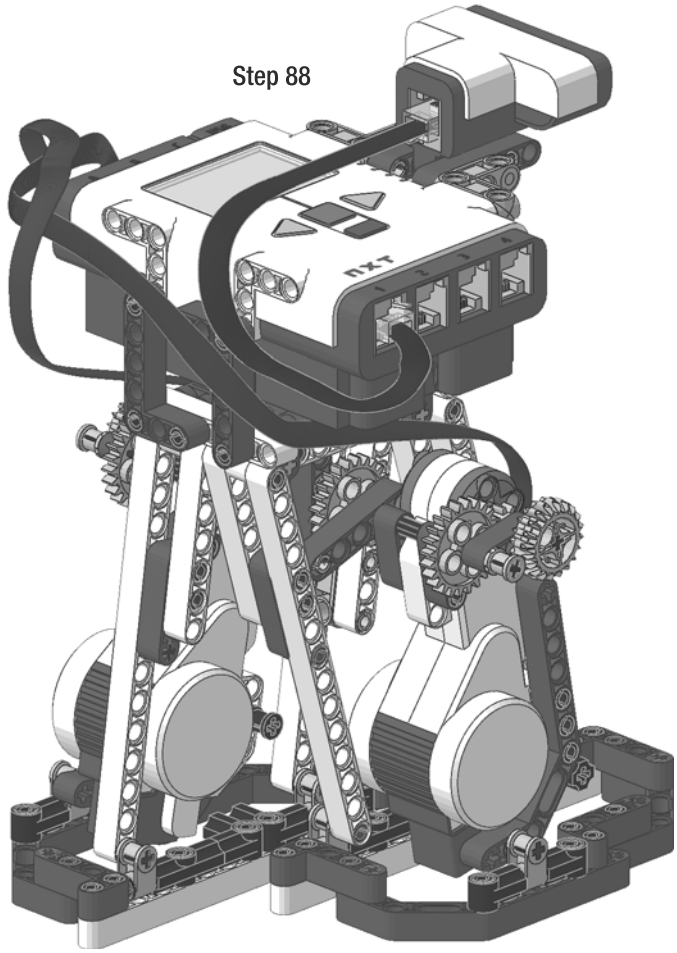

Attach the Ultrasonic Sensor to NXT input port 1 using a 20cm (8 inch) cable.

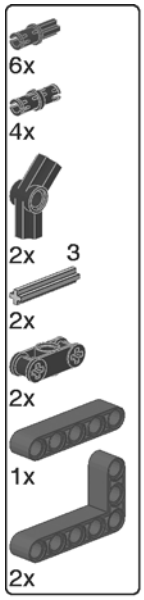

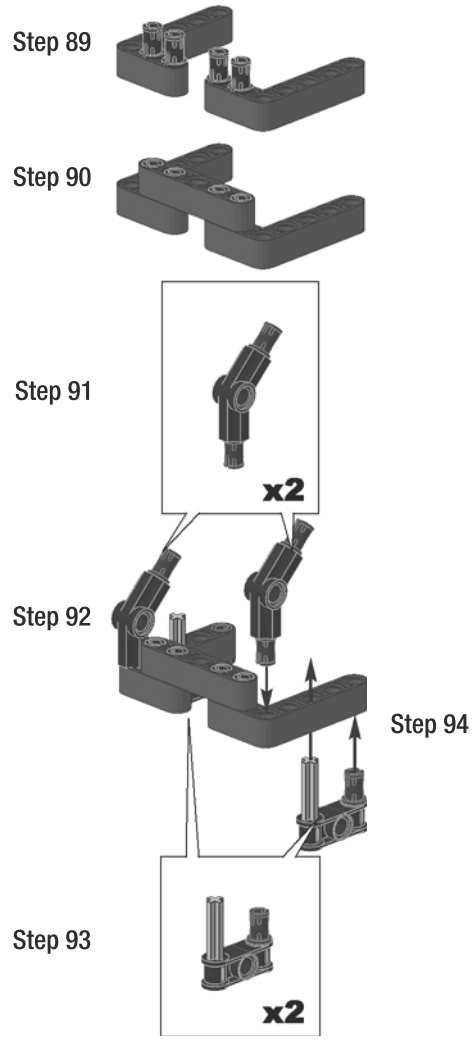

Start building the arms' decorative assembly. This submodel is optional and can be replaced or customized as you want, just paying attention not to compromise the robot's balance.

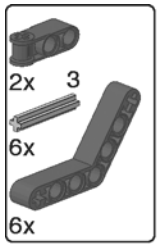

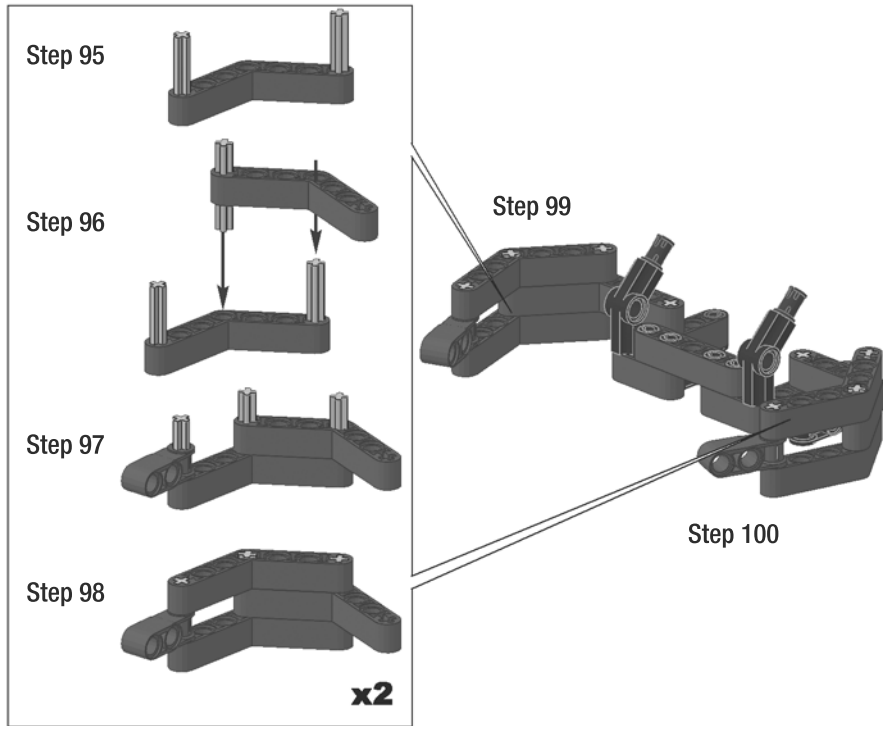

Build the arms themselves and attach them to the rest of the assembly.

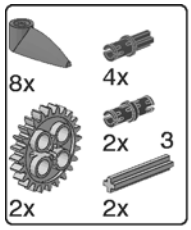

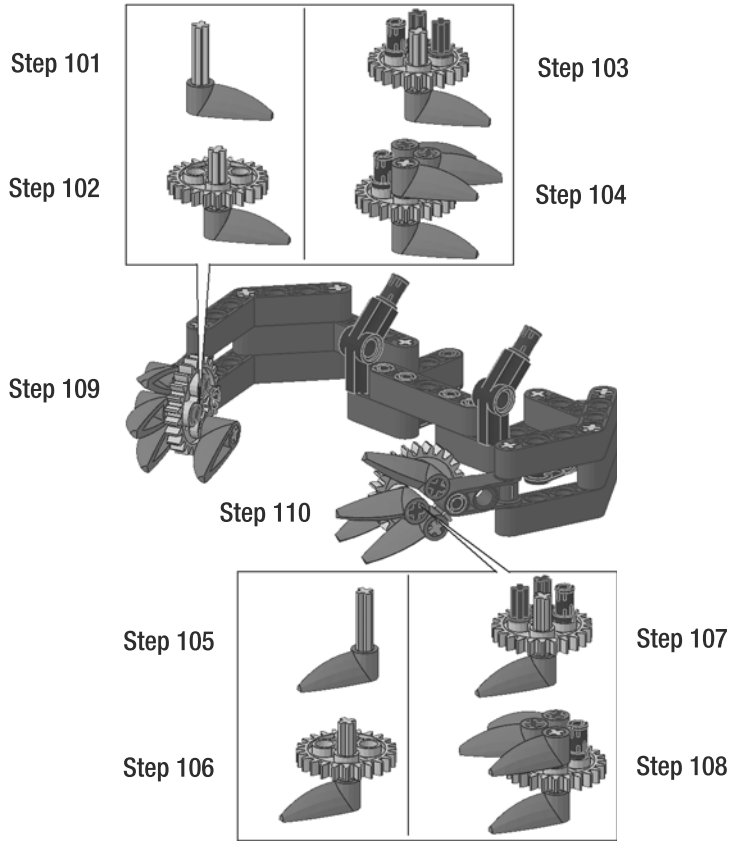

Build the hands.

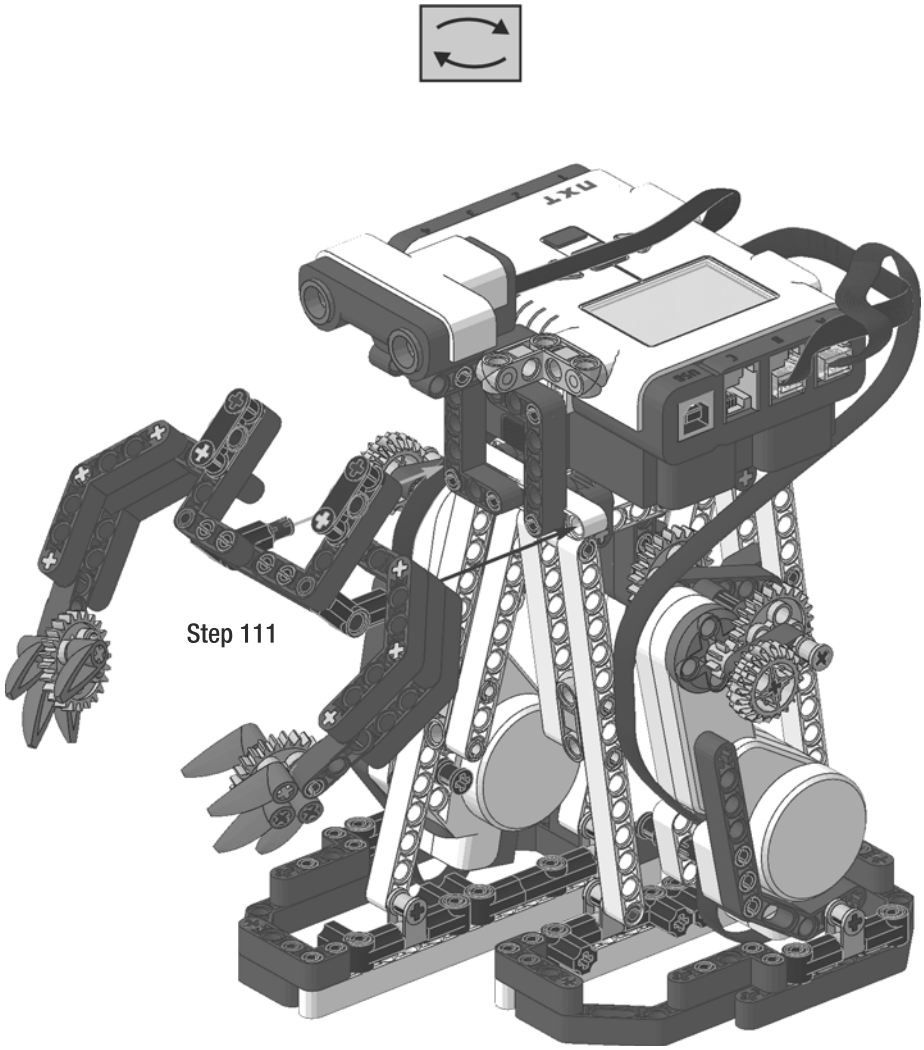

Attach the arms' subassembly to the robot.

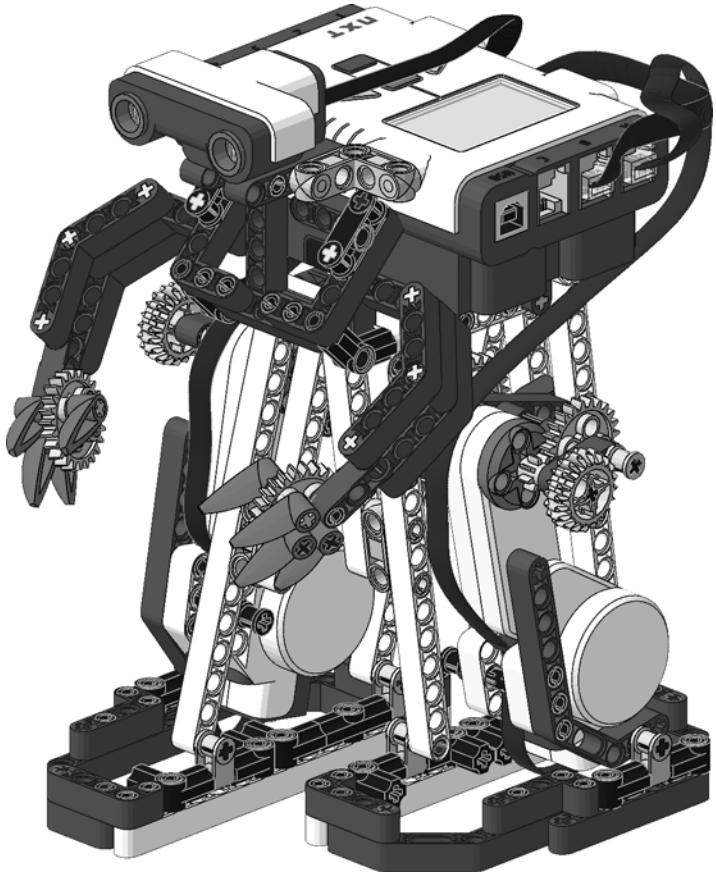

The Omni-Biped is completed.

Summary

In this chapter, you've been introduced to a small and quick biped robot—the walker alternative to the LEGO wheeled Tribot. This is a simple project, with respect to other ones you'll find later in the book. Still, it offers many ideas, and an occasion to show some techniques that could be useful in other situations.

Alpha Rex inspired the Omni-Biped legs' shape, but notice how small but fundamental modifications have notably improved the gait, especially regarding turning. The motor is a mobile part of the leg itself, while in Alpha Rex, motors are hung inside the leg frame and don't move during the gait. Here, every motor drives a whole leg, both stepping and leaning, while in Alpha Rex the motors control different movements of both legs together; that is, one motor controls robot leaning, the other controls the stepping. Furthermore, the turning mechanism is much more elegant in Omni-Biped than in Alpha Rex, whose solution (with rubber grippers) is not realistic.

On the software side, you saw the difference between single-task and multitask programs. We also touched the tip of the iceberg with regards to concurrent programming difficulties and their solution: the mutual exclusion semaphores. Also, the modulo operator (%) could

be useful in your future projects. Finally, we analyzed the operation, the uses, and the implementation of the hysteresis cycle.

Having three sensor ports left, there's plenty of space for add-ons and new features. Don't forget the third motor in your box that is waiting for action! The following exercises might also inspire you to build some new type of robot. If your creativity needs to be sparked some more, keep on reading the next chapters.

Exercise 5-1. Hardware Ideas

Rebuild the leg frames to shape a chicken-like leg, with a reverse bent knee. Modify the motor placement accordingly, to keep using the motors as structural support.

Add a tail and a head (like a dinosaur) that would follow the legs' movement, helping the COG shifting. For example, when the robot is leaning left, the tail would be bent left, and the same for the right side, balancing the robot. You might drive the tail with the third motor or use the leg motors themselves.

After having read the AT-ST instructions in Chapter 4, try to add sensors and modify the software to let your robot reset its leg position automatically at program startup.

Don't let that third motor go to waste! After having read Chapter 7, you can use its fetching arm as a starting idea to develop a grabber for Omni-Biped. Could you give it the ability to find objects autonomously?

The world is full of line-following robots on wheels. There aren't that many line-following walkers. There's no need to say a word more. Do it!

Exercise 5-2. Software Ideas

Using the multitask version of the software, add new tasks to play a melody while walking, and display animation. Be careful when using the mutex variables to synchronize display access for animation and string messages, and voice announcements with music.

After having read Chapter 3 about FSMs and Chapter 6 about the NXT Turtle, try to give the Omni-Biped an autonomous behavior. You can use as state names (and corresponding functionality) Lazy, Normal, Worried, and Dancing; transition events among states could be an incoming obstacle, a sharp sound, a sound pattern, or a timer elapsing. The robot in Lazy state could stand still, performing some random movement; when it senses a sharp sound, its state could become Worried and it would walk a bit. If the sounds continue around it, the Dancing state could be triggered, and the robot would eventually start to dance. In Normal state, finally, it could walk, avoiding obstacles. These are just a few ideas, but you can customize the robot's behavior as you prefer.